# 500KA 2-Electrode Gas Arrester

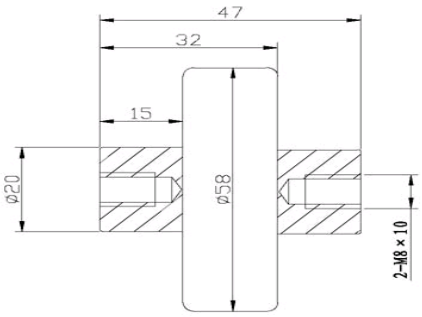

| Item# | Part Number | | | | | | | | | | |
|---|---|---|---|---|---|---|---|---|---|---|---|
| | BL070-50 | BL090-50 | BL150-50 | BL230-50 | BL350-50 | BL500-50 | BL600-50 | BL800-50 | BL1000-50 | BL1200-50 | BL1500-50 |
| DC spark-over voltage (V) | 70±20% | 90±20% | 150±20% | 230±20% | 350±20% | 500±20% | 600±20% | 800±20% | 1000±20% | 1200±20% | 1500±20% |
| Impulse spark-over voltage at 1KV/μS (V) | ＜600 | ＜700 | ＜700 | ＜800 | ＜800 | ＜1100 | ＜1200 | ＜1400 | ＜1800 | ＜2000 | ＜2500 |
| Nominal impulse discharge current 8/20μS (KA) | 500 | 500 | 500 | 500 | 500 | 500 | 500 | 500 | 500 | 500 | 500 |
| Single impulse discharge current 8/20μS (KA) | 1000 | 1000 | 1000 | 1000 | 1000 | 1000 | 1000 | 1000 | 1000 | 1000 | 1000 |
| Nominal impulse discharge current10/350μS (KA) | 120 | 120 | 120 | 120 | 120 | 120 | 120 | 120 | 120 | 120 | 120 |
| Single impulse discharge current 10/350μS (KA) | 200 | 200 | 200 | 200 | 200 | 200 | 200 | 200 | 200 | 200 | 200 |
| Nominal alternating discharge current (A) | 500 | 500 | 500 | 500 | 500 | 500 | 500 | 500 | 500 | 500 | 500 |
| Alternating discharge current (50Hz 0.4S) (A) | 4000 | 4000 | 4000 | 4000 | 4000 | 4000 | 4000 | 4000 | 4000 | 4000 | 4000 |
| Insulation resistance at 250Vdc (MΩ) | ＞10000 | ＞10000 | ＞10000 | ＞10000 | ＞10000 | ＞10000 | ＞10000 | ＞10000 | ＞10000 | ＞10000 | ＞10000 |
| Hold over voltage (V) | | | | | | | | | | | |
| Capacitance at 1MHz ( Pf) | ＜20 | ＜20 | ＜20 | ＜20 | ＜20 | ＜20 | ＜20 | ＜20 | ＜20 | ＜20 | ＜20 |
| Arc voltage at 1A (V) | ~25 | ~25 | ~25 | ~25 | ~25 | ~25 | ~25 | ~25 | ~25 | ~25 | ~25 |
| Operation and storage temperature (℃) | -40～+90 | -40～+90 | -40～+90 | -40～+90 | -40～+90 | -40～+90 | -40～+90 | -40～+90 | -40～+90 | -40～+90 | -40～+90 |